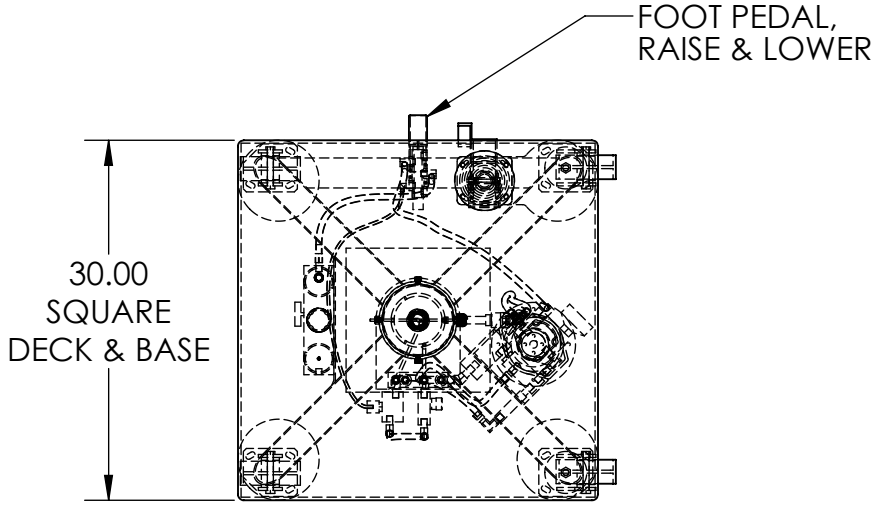

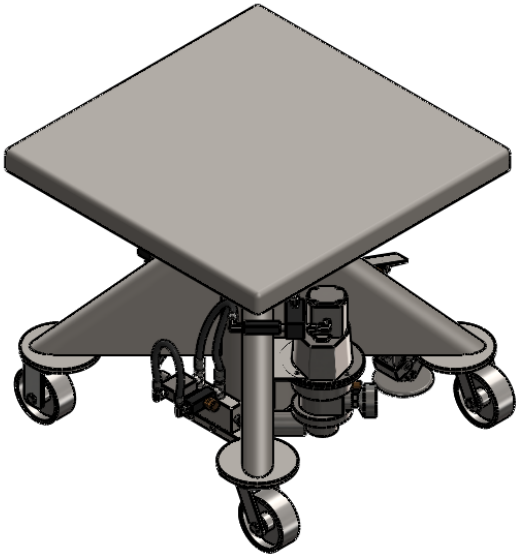

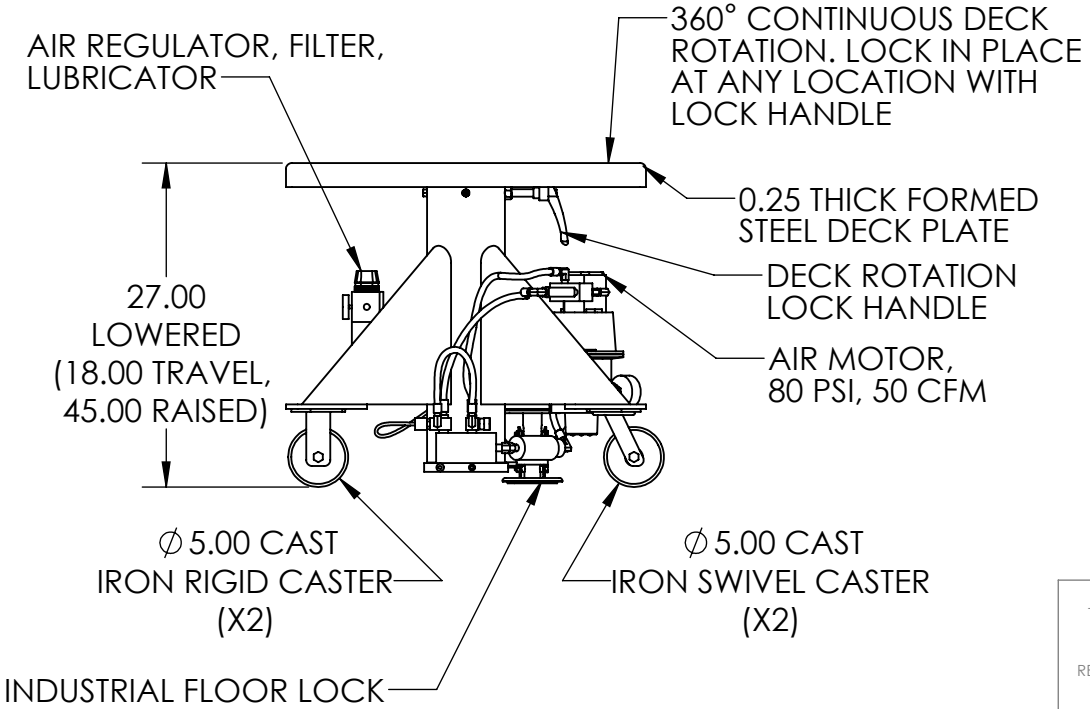

MODEL: L-230-AP

CAPACITY: 2000 POUNDS
DECK: 30" SQUARE, 360° ROTATION WITH LOCK HANDLE
BASE: 30" SQUARE WITH FLOOR LOCK, (2) CAST IRON RIGID CASTERS, (2) CAST IRON SWIVEL CASTERS, (1) FLOOR LOCK
POWER: AIR MOTOR, 80 PSI, 50 CFM, ON BOARD AIR REGULATOR, FILTER, AND LUBRICATOR
CONTROL: ON BOARD FOOT PEDAL, RAISE & LOWER
PAINT: MACHINE GREEN

NOTES: WE CAN MODIFY ANY OF OUR PRODUCTS OR COMPLETELY CUSTOMIZE A LIFT FOR YOUR UNIQUE APPLICATIONS. PLEASE CONTACT YOUR SALES REPRESENTATIVE. COMPONENTS MAY VARY FROM DRAWING BASED ON AVAILABILITY OF MATERIALS.

PRODUCTS THAT LIFT THE WORLD
LANGE-LIFT
A DIVISION OF HEVI-HAUL INTERNATIONAL, LTD.

Lange Lift Company
a Division of Hevi-Haul Int'l. Ltd.
PO Box 580
Menomonee Falls, WI 53052-0580
Toll Free : +1 800.558.0577
P: +1 262.502.0333
F: +1 262.502.0260
E-Mail: sales@langelift.com

DIMENSIONS ARE IN INCHES

PROPRIETARY AND CONFIDENTIAL
THE INFORMATION CONTAINED IN THIS DRAWING IS THE SOLE PROPERTY OF LANGE LIFT. ANY REPRODUCTION IN PART OR AS A WHOLE WITHOUT THE WRITTEN PERMISSION OF LANGE LIFT IS PROHIBITED.

DRAWN BY: D. Knaebe	CHECKED BY/DATE:	
TITLE: L-230-AP Specification Sheet		DATE: 12/28/2012
SCALE: 1:16	DWG. NO. L-230-AP	REV.